INTERFACE FOR AN ICOM IC-705 TO AN ATU-100

This Schematic is to interface an ICOM IC-705 transceiver to an ATU-100 (by N7DDC) and use the IC-705's TUNER function BUTTON to initiate "tune" or "reset" of the ATU.

Use EITHER an ATtiny85 or Arduino NANO board
See Sketch for details when compiling

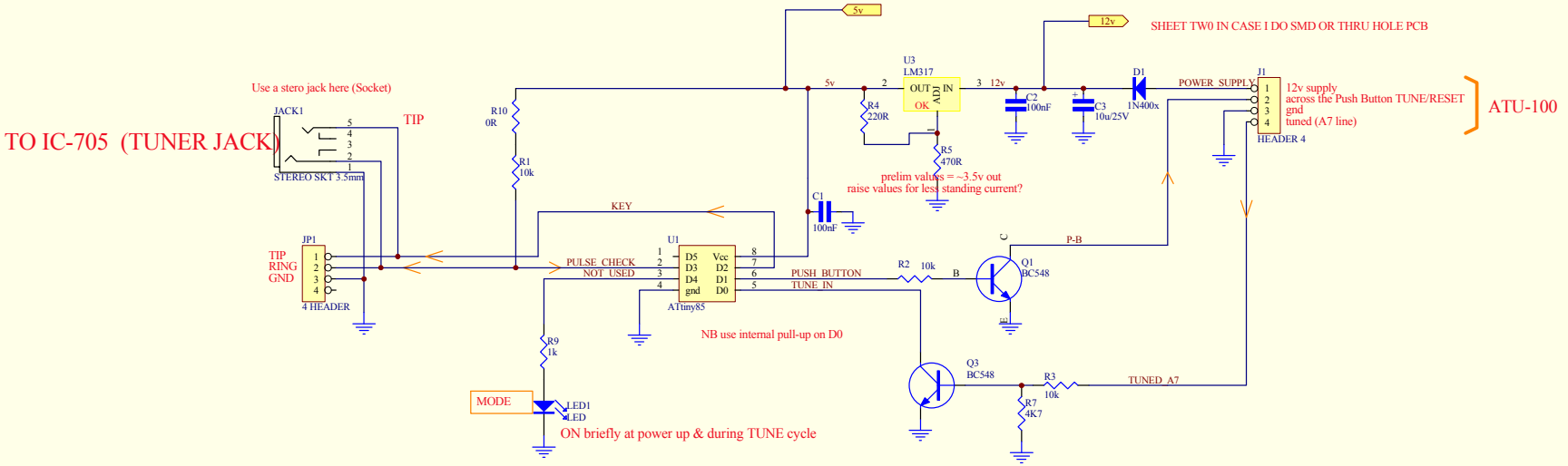

DRAFT ATtiny ONLY version
V1.1 Sch etc

note the footprint for lm317 is reversed in bds sent out

14/02/2021 ATtiny only Sch V1.1 pcb
020221 ADDED ARDUINO NANO ALTERNATE
30th Jan add PNP to START line to IC-705
VK3PE Jan 29TH, 2021 DRAFT

for PCB see "IC-705 to ATU-100 interface_ATtiny_2.pcb"
FOR SOFTWARE, SEE "IC705_ATU100_5.ino"

Title			(C) VK3PE 2020
Size: A3	Number:	Revision:	
File:	Date: 11-Apr-2021	Time: 09:53:16	Sheet 1 of 1

D:\PROJECTS 2021\ATU_100-ic705\ATtiny85 ONLY VERSION\IC-705_INTERFACE-TO-ATU-100_ATtiny_V1.1.sch